IntelliReader Manual

Important

The IntelliReader is intended for professional installation only. The customer and their installer are responsible for installation, wiring, configuration, and code compliance. 33 Lock does not supply or control third-party hardware and is not responsible for improper installation, misuse, or failure to meet applicable electrical, building, fire, or life-safety requirements.

Overview:

The 33 Lock IntelliReader is an all-in-one access control reader and controller designed to manage a single access point without the need for a separate central control unit. Each IntelliReader operates independently and can be installed at individual doors, simplifying system design and deployment.

The IntelliReader connects to the same network gateway used by other 33 Lock products, operates on the same software platform, and accepts the same credentials (keys). This allows properties to seamlessly manage users and access permissions consistently across different door types.

As a cost-effective solution, the IntelliReader is well suited for properties seeking point-specific access control without the complexity of centralized panels or multi-door controllers. The IntelliReader is intended for use with common access control locking hardware as part of a low-voltage access control system.

What's Included:

- IntelliReader
- Mounting plate
- Basic mounting screws
- Wireless gateway (sold separately)
- Weather cover (sold separately)

What's Not Included:

- Electric strike or mag lock
- Door egress hardware
- 12v power supply
- Low voltage or network cable
- Network equipment

This diagram illustrates a typical IntelliReader installation using an electric strike, external power supply, and network gateway. The gateway is available in Wi-Fi and PoE models; Configurations 1 and 2 show the corresponding installation setups.

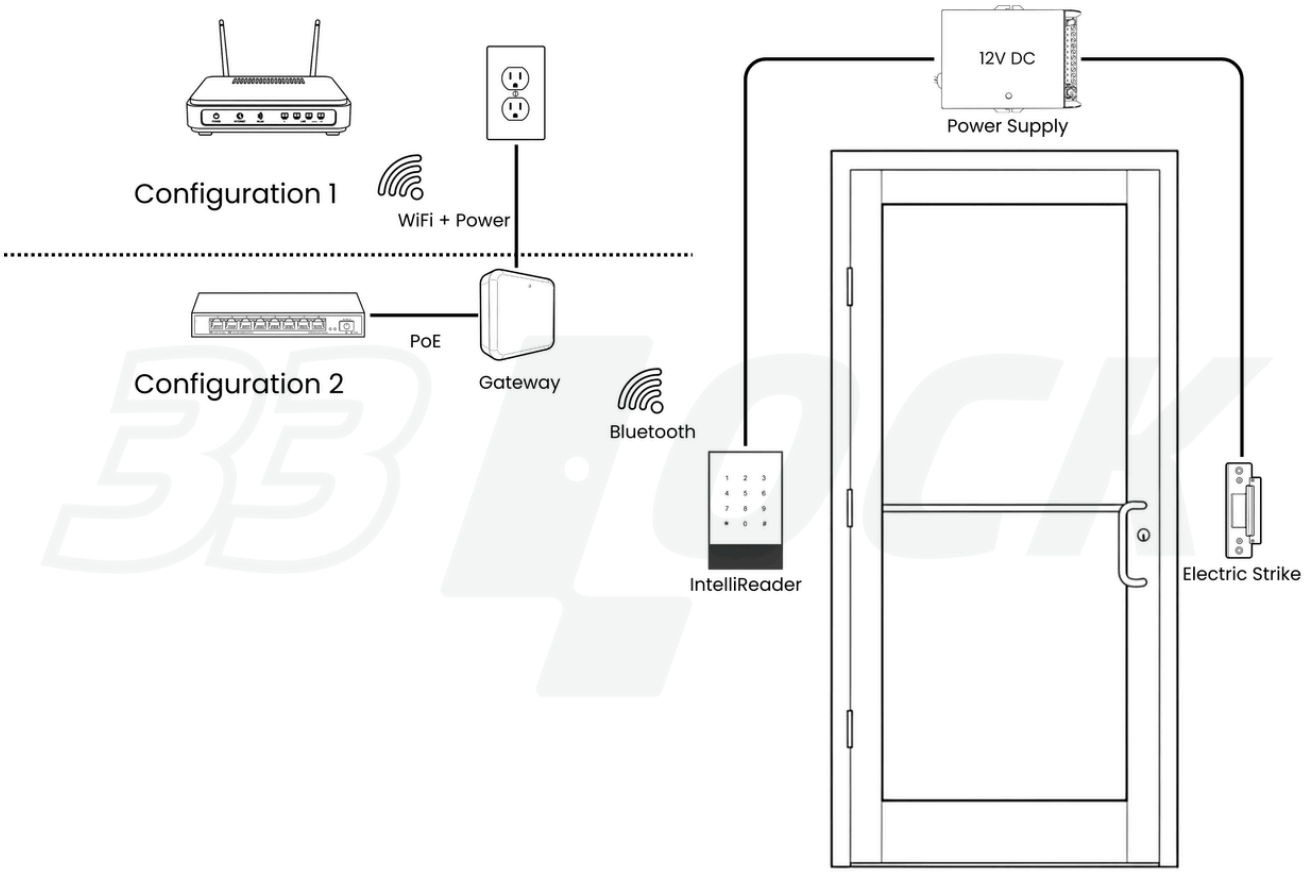

Power Distribution

- The external 12 V DC power supply provides power to the IntelliReader and the electric strike.

Lock Control

- The IntelliReader uses its internal dry contact relay to control power to the electric strike.

Credential Authentication

- Users present credentials (card, PIN, or mobile) at the IntelliReader. When access is granted, the relay activates and unlocks the door.

Network Communication

- The IntelliReader communicates wirelessly with the network gateway. The gateway connects to the local network through WiFi or PoE, depending on the gateway model.

Software Management

- Device onboarding, configuration, and management are handled through the TTLock platform.

Specifications:

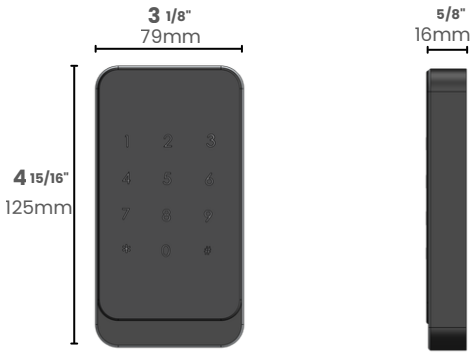

Electrical:

- Input Voltage: 12 V DC
- Current Consumption: ≤ 50 mA (standby), ≤ 1.0 A (operating)
- Recommended Power Supply: 12 V DC regulated; minimum 2 A for electric strikes; magnetic lock current rating + 30% headroom

Relay Output:

- Dry contact relay (NO / NC / COM)
- Relay duration programmable via the app

Lock Compatibility:

- Electric strikes (fail-secure or fail-safe)
- Magnetic locks (fail-safe)
- Systems accepting a dry contact trigger

Inputs / Outputs:

- Inputs: Exit button (REX), doorbell, optional door position sensor (DPS)
- Outputs: Lock control relay, doorbell output

Communication:

- Bluetooth 4.1
- Android 4.3+ / iOS 7.0+

Capacity:

- Up to 1000 PIN codes
- Up to 20,000 RFID cards (MIFARE®, 13.56 MHz)

Environmental:

- IP66
- –30 °C to +60 °C (–4 °F to 140 °F)
- 10–95% RH, non-condensing

Physical:

- Aluminum frame with tempered glass front
- Surface mount

Installation Instructions:

Important

Designed for low-voltage access control systems, the IntelliReader must be installed in compliance with local electrical and fire codes. Magnetic lock installations may require independent egress release devices, and supply voltage should be verified at the IntelliReader terminals under load.

Terminal & Wire Legend:

Wire Color	Label	Function
Red	+12V	+12V
Black	GND	Ground
Orange	NC	Normally Closed
Yellow	COM	Common
Green	NO	Normally Open
Blue	SW	Exit Button / Switch
White	BELL	Doorbell
Brown	BELL	Doorbell

Electric Strike Wiring:

Recommended wire gauges:

- Power & Lock: 18 AWG Stranded (Red/Black)
- Data & Signal: 22 AWG Stranded (Other Colors)

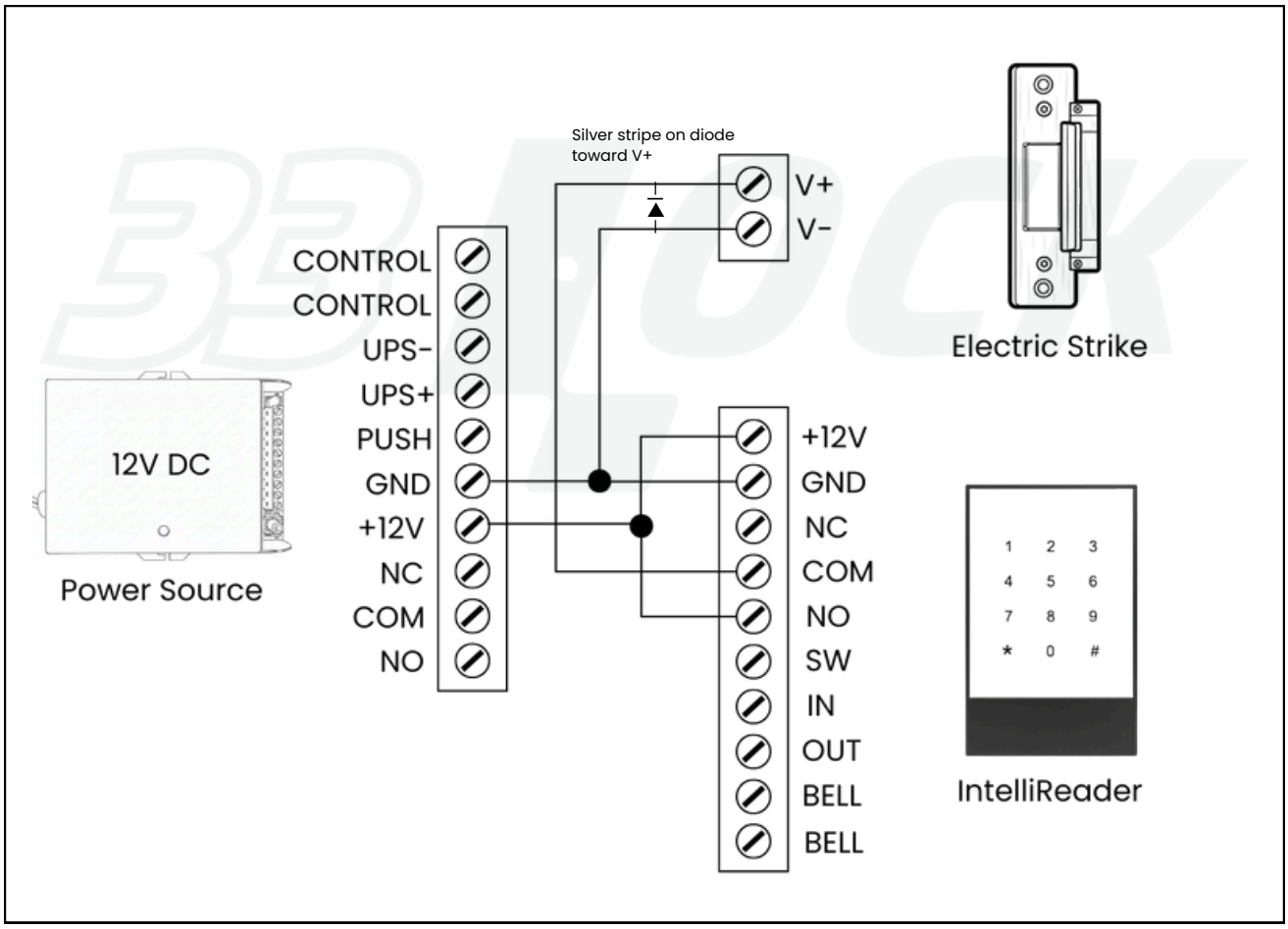

Important

Install 1N4007 diode across strike terminals as shown. STRIPE TO POSITIVE (+). Failure to install will void warranty and could damage reader relay.

Magnetic Lock Wiring:

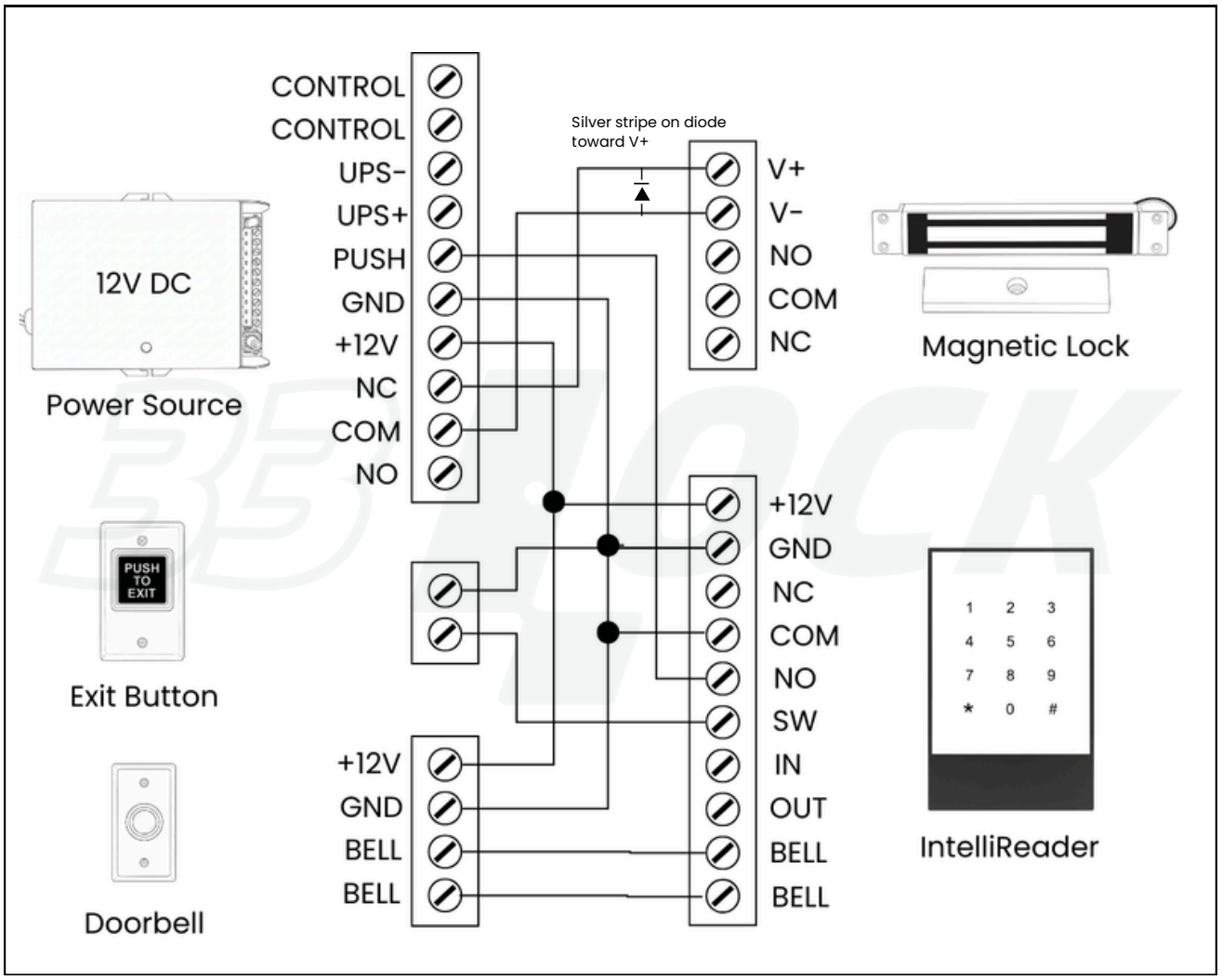

Important

Install 1N4007 diode across mag lock terminals as shown. STRIPE TO POSITIVE (+).
Failure to install will void warranty and could damage reader relay.

Mounting Instructions:

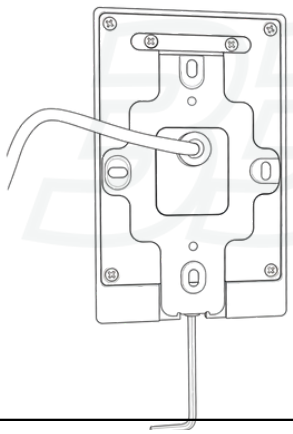

Step 1: Remove the screw at the bottom of the mounting plate using an Allan Key.

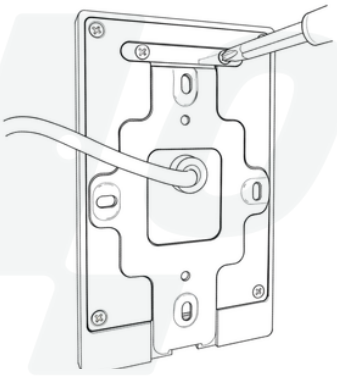

Step 2: Remove the two screws from the cross plate and then remove the cross plate.

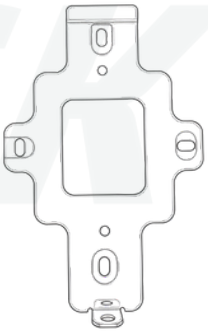

Step 3: Remove the mounting plate from the IntelliReader body.

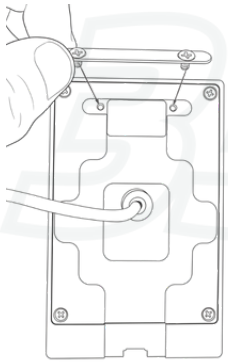

Step 4: Reinstall the cross plate onto the IntelliReader.



Step 5: Drill a hole in the wall at the appropriate position to feed the cable.

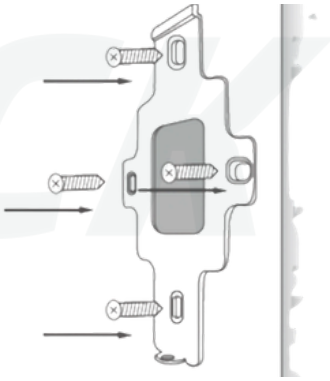

Step 6: Fix the mounting plate with 4 screws.

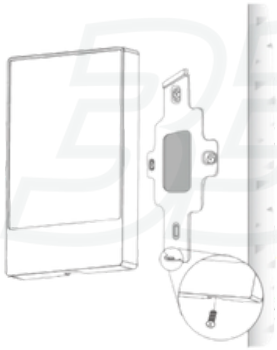

Step 7: Hook the cross plate onto the installed mounting plate. Once hooked on, align the bottom screw holes and reinstall the screw through the IntelliReader and the mounting plate.